ASSEMBLY INSTRUCTIONS

Item No : 1000293

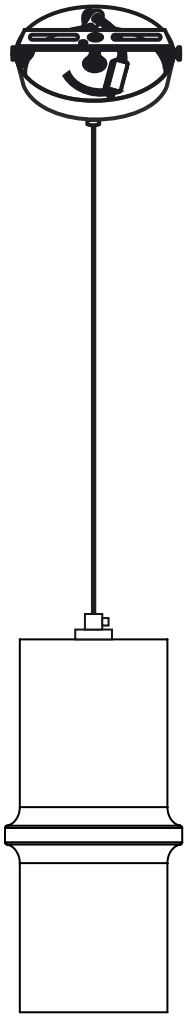

STEP 1

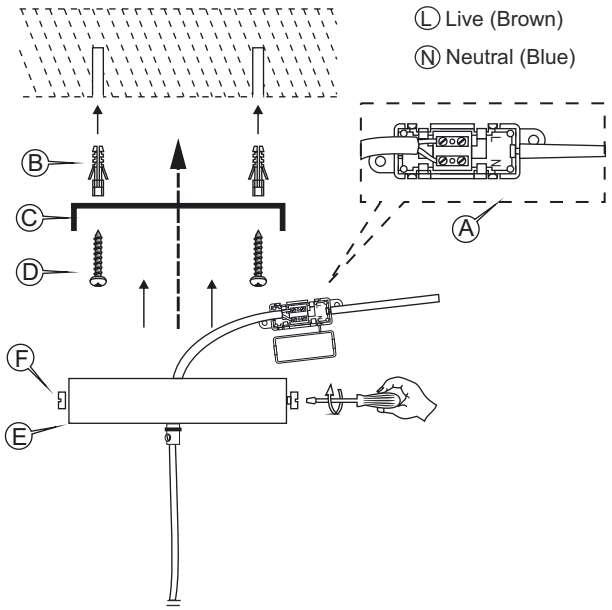


STEP 2

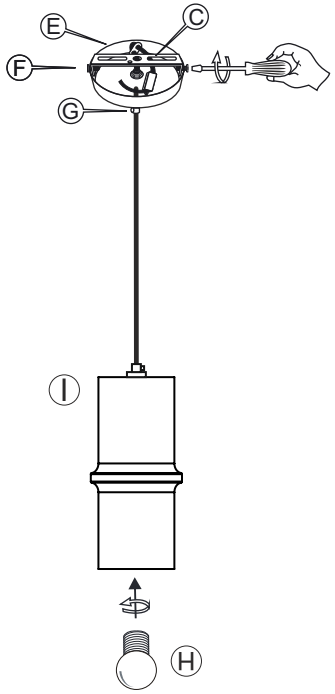




STEP 1

1 Secure the mounting plate (C) with screw (D) in the plastic ceiling mounts (B).

2 After secure the mounting plate, connect the two power wires coming out from the ceiling to the white plastic connector (A).

STEP 2

1 Tighten the canopy (E) with side screw (F) to the mounting plate (C) and tighten the screw on plastic cord grip (G)

2 Secure the light bulb (H) / E14 into the plastic lamp holder (I)

Bulb is not included with this item.

- To prevent the risk of fire, do not use bulb with wattage greater than 7W LED.

## Mounting Instructions:

- This luminaire should be assembled and mounted by a qualified electrician only
- If the external flexible cable or cord of this luminaire needs to be changed it should be replaced by a qualified electrician.